External Dimensions Diagram

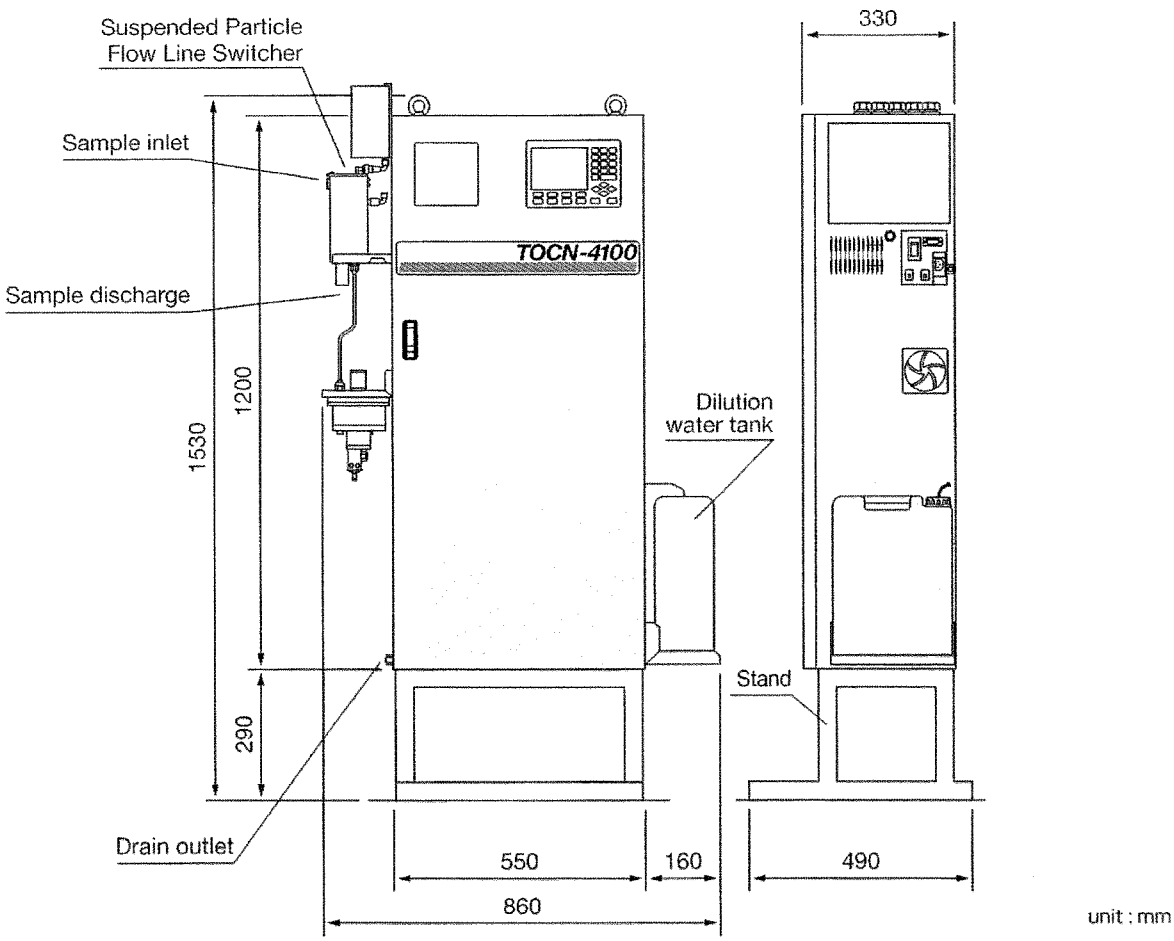

The dimensions and shape of all units in the On-Line Water Quality Analyzer Series 4100 are the same.
(The above diagram displays the TOCN-4100 with stand and Suspended Particle Flow Line Switcher)

SHIMADZU

SHIMADZU CORPORATION. International Marketing Division
3, Kanda-Nishikicho 1-chome, Chiyoda-ku, Tokyo 101-8448, Japan
Phone: 81(3)3219-5641 Fax. 81(3)3219-5710 Cable Add.:SHIMADZU TOKYO

SHIMADZU SCIENTIFIC INSTRUMENTS, INC.
7102 Riverwood Drive, Columbia, Maryland 21046, U.S.A.
Phone: 1(410)381-1227 Fax. 1(410)381-1222 Toll Free: 1(800)477-1227

SHIMADZU DEUTSCHLAND GmbH
Albert-Hahn-Strasse 6-10, D-47269 Duisburg, F.R. Germany Phone: 49(203)7687-0 Fax 49(203)766625

SHIMADZU (ASIA PACIFIC) PTE LTD.
16 Science Park Drive #01-01 Singapore Science Park, Singapore 118227, Republic of Singapore
Phone: 65-778 6280 Fax. 65-779 2935

WWW Home page address http://www.shimadzu.com

SHIMADZU SCIENTIFIC INSTRUMENTS (OCEANIA) PTY. LTD.
Rydalmere Business Park, Unit T, 10-16 South Street, Rydalmere N.S.W. 2116, Australia
Phone: 61(2)9684-4200 Fax 61(2)9684-4055

SHIMADZU DO BRASIL COMERCIO LTDA.
Rua Cenno Sbrighi, 25, Agua Branca, Sao Paulo, CEP 05036-010, BRAZIL
Phone: (55)11-3611-1688 Fax. (55)11-3611-2209

SHIMADZU (HONG KONG) LIMITED
Suite 1028 Ocean Center, Harbour City, Tsim Sha Tsui, Kowloon HONG KONG
Phone: (852)2375-4979 Fax. (852)2199-7438

Overseas Offices
Istanbul, Beijing, Shanghai, Guangzhou, Shenyang, Chengdu, Moscow

URL http://www.shimadzu.com

The contents of this catalog are subject to change without notice.

TOC-4100 Measurement system diagram

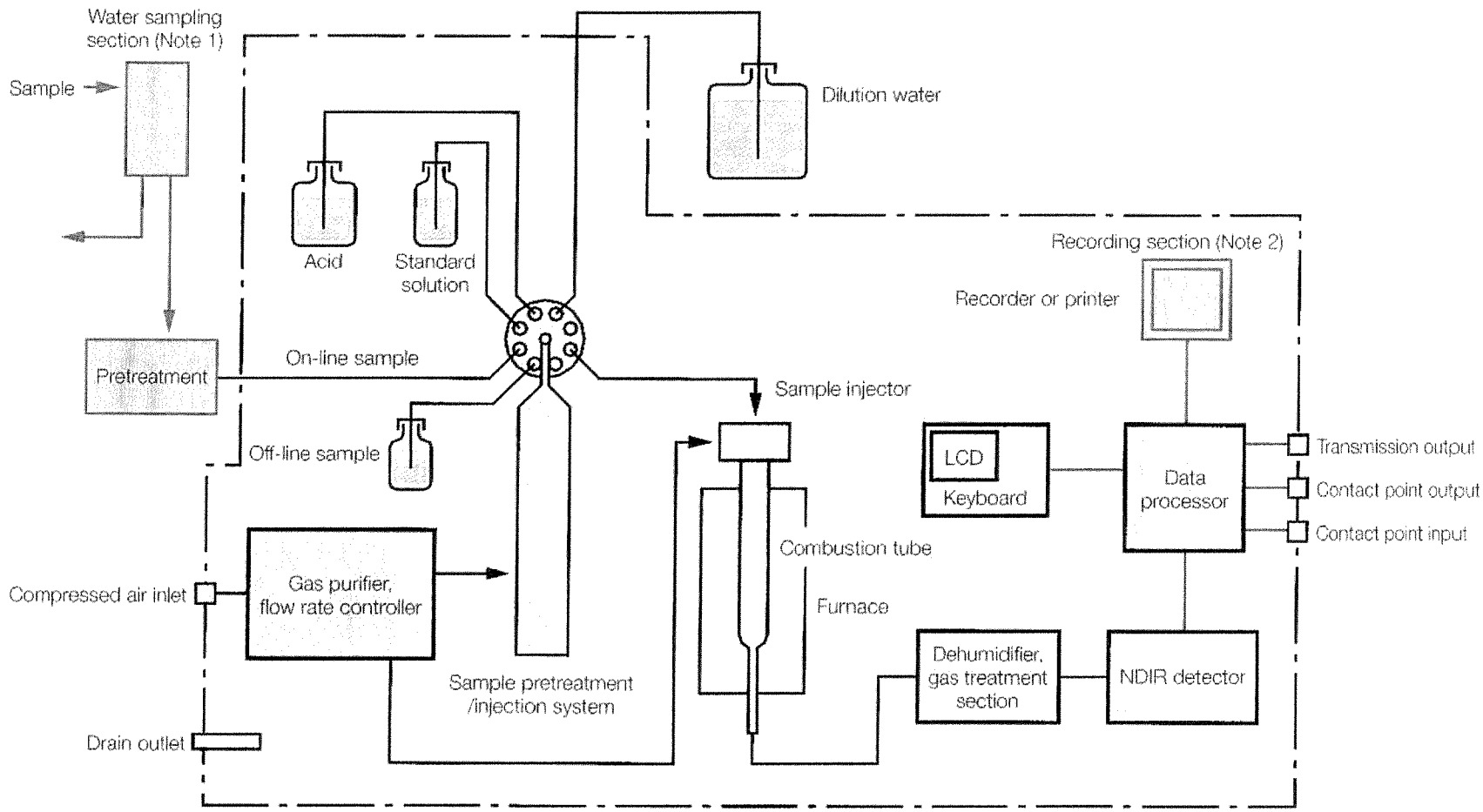

Notes
1) For the sampling section, select either shown suspended particle flow line switcher or the sample stream set (both option)
2) For the recording section, select either the recorder or the printer (both option).